DP-6210 Max
Loudspeaker System

Sound reinforcement for karaoke venues

Professional Series

Key Features:

- 10″ high power and high efficiency woofer.
- 1.7″ annular polymer diaphragm compression driver with ferrite magnet system.
- Enclosure constructed of 15 mm plywood with durable painting
- 70° X 60° coverage pattern for even and smooth response on and off axis.
- Precision engineered crossover for optimal power response and performance in the vocal midrange.
- Single position pole socket for applications requiring pole mounting.
- SonicGuard™ protects high frequency driver from excessive power without interrupting the performance.
- Rotatable and luminous DOMUS PRO LOUND logo for easy coherence to your installation.
- Passive Sound Lighting Technology indicates DP-6210 Max speaker devotion to scientific advancement.

Applications:

- Sound reinforcement for karaoke venues.
- Audio reproduction for nightlife clubs.
- As satellite speaker for use with subwoofers.

DP-6210 Max is a professional-grade full-range loudspeaker designed for high-street KTV venues and club houses. The 2-way speaker combines a 10″ (254mm) woofer with the 1.7″ (44mm) TR44026-2 annular polymer diaphragm neodymium compression driver, and stands itself out for its high power handling, low distortion and noticeable electro-acoustic conversion efficiency. Its 70°x60° coverage pattern provides smooth and even coverage whether installed in vertical or horizontal orientation. A high-slope passive networking is utilized for minimized band overlap.

DP-6210 Max outshines its league for its one-of-a-kind Starry Brown appearance. The rugged enclosure, which is constructed from 15mm plywood and finished in durable paint-coating, ensures the combination of visual and sound beauty last long. The front grille made from 16-gauge steel and backed with acoustic fabrics not only creates an air of elegance but also provide enough protection for drivers and components inside. The entire whole is fitted with dual NL4MP connectors for loop-thru of multiple speakers, thirteen (13) M10 threaded suspension points and six (6) M10 screws for bracket mounting, as well as a 35mm socket for pole mounting.

A showcase of DP-6210 Max speaker dedication to technology ad vancement, the rotatable DOMUS PRO LOUND logo will constantly illuminate during your hilarious karaoke singing. Thanks to the PSL (Passive Sound Lighting) Technology, the legendary DOMUS sound is now visible.

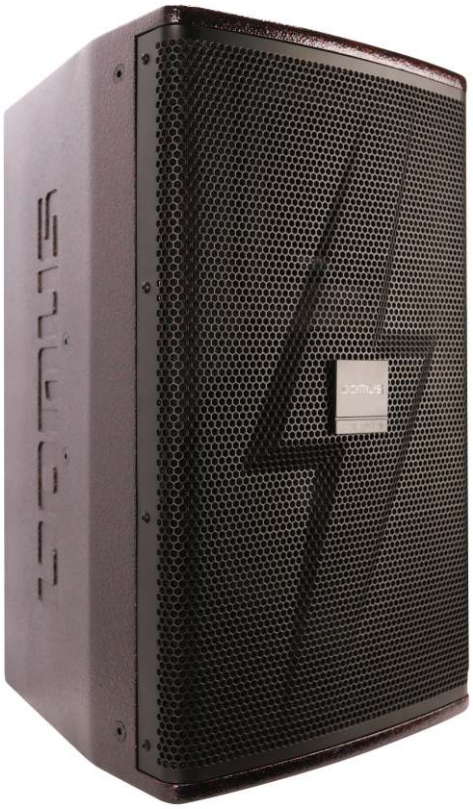

Specifications:

System:

System Type:	10″ , 2-way, bass-reflex
Frequency Range (-10 dB):	50 Hz - 20 kHz
Frequency Response (±3 dB):	85 Hz - 20 kHz
Sensitivity (1w@1m):	95 dB
Nominal Impedance:	8 Ohms
Maximum SPL:	122 dB (128 dB peak)
Power Rating: (Continuous/Program/Peak)	300 W/600 W/1200 W
Coverage Pattern:	70° X 60° (H X V)

Physical:

Dimensions (H X W X D):	510 mm X 312 mm X343 mm
	20 inch x 12.3 inch x 13.5 inch
Net Weight:	15 Kg
LF Driver:	1X 10" (254mm) woofer
	2.5 inch voice coil,ferrite magnet
HF Driver:	1 x 1.7" (44 mm) TR44026-2 Compression driver, 1.7″ voice coil,ferrite magnet
Input Connectors:	2 x Speakon NL4MP
Enclosure Construction:	Trapezoid, 15 mm, plywood

DP-6210 MAX(Royal blue)

DP-6210 MAX

DP-6210 MAX(Dreamy pink)

DP-6210 Max

10-Inch Full Range Loudspeaker System

Frequency Response:

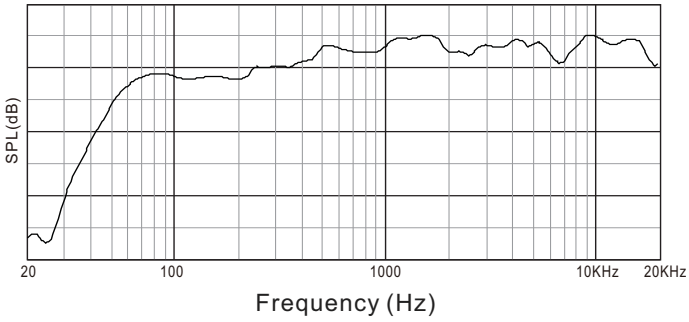

Beamwidth:

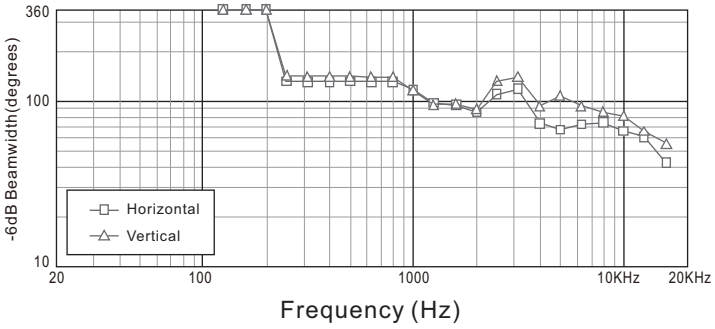

Dimensions:

Dimensions in mm

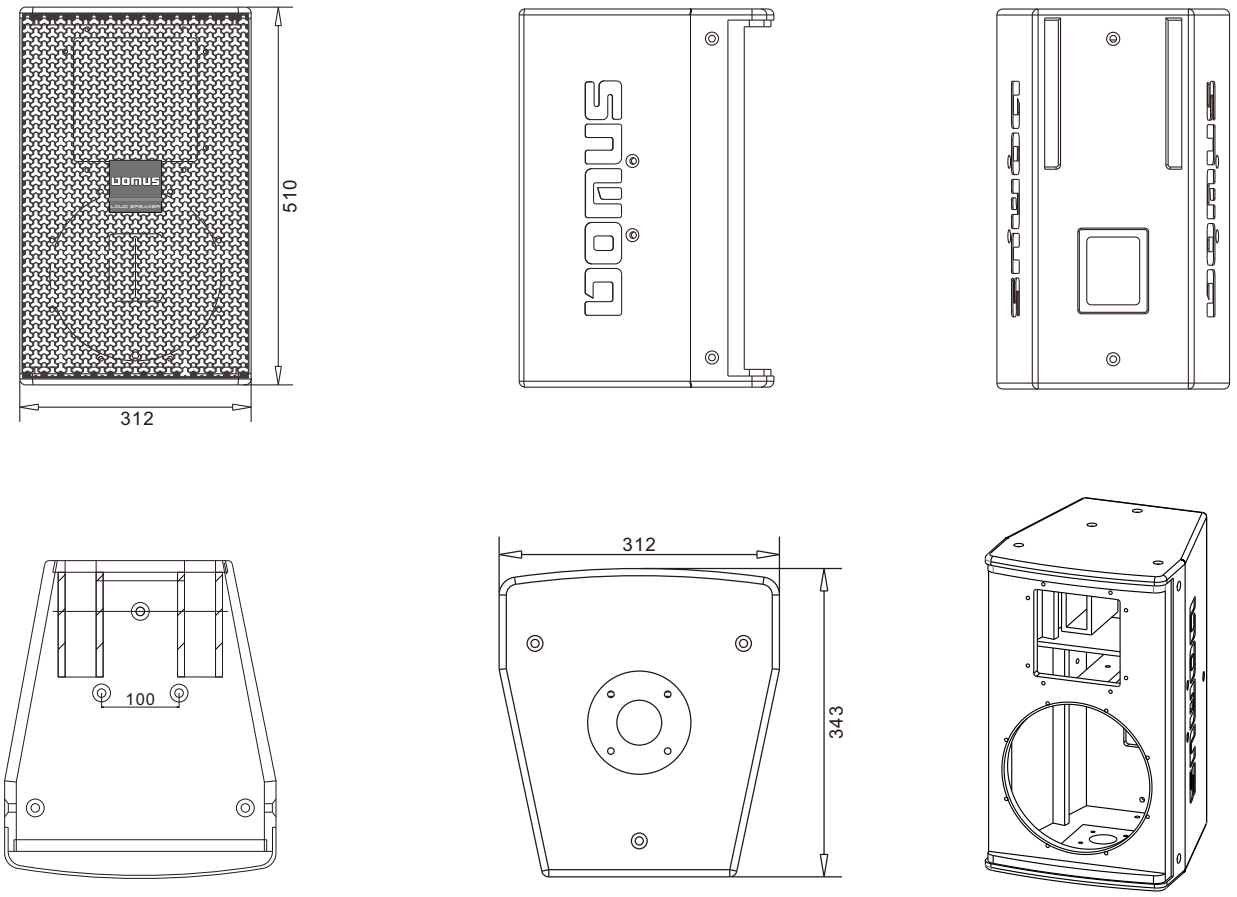

DOMUS JAPAN(H.K.)CO.,LTD
Add:The new territories of Hongkong New Road No. 188
Cambridge Plaza A block 6 Building Room 602
Tel:(852)26703806
Fax:(852)26684558
http:www.domus.com.cn

DP-6212 Max
Loudspeaker System

Professional Series

Key Features:

- 12″ high power and high efficiency woofer.
- 1.75″ Compression driver, 1.75″ voice coil,ferrite magnet
- Enclosure constructed of 15 mm plywood with durable painting
- 70° X 60° coverage pattern for even and smooth response on and off axis.
- Precision engineered crossover for optimal power response and performance in the vocal midrange.
- Single position pole socket for applications requiring pole mounting.
- SonicGuard™ protects high frequency driver from excessive power without interrupting the performance.
- Rotatable and luminous DOMUS PRO LOUND glowing entertainment logo for easy coherence to your installation.
- Passive Sound Lighting Technology indicates DP-6212 Max speaker devotion to scientific advancement.

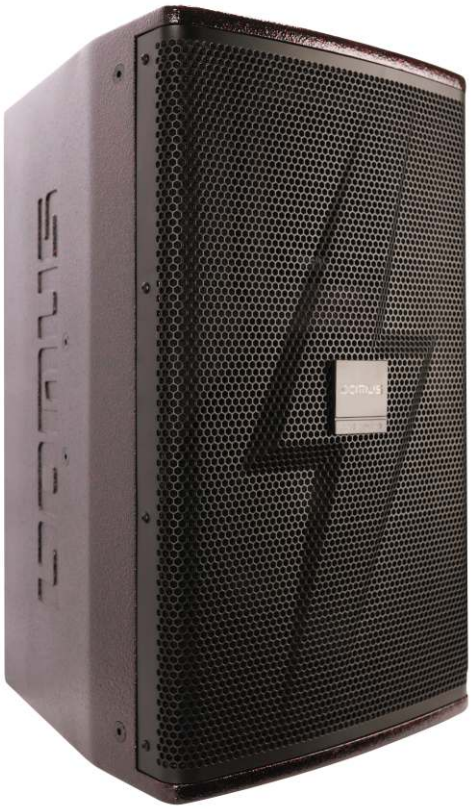

Applications:

- Sound reinforcement for karaoke venues.
- Audio reproduction for nightlife clubs.
- As satellite speaker for use with subwoofers.

DP-6212 MAX is a professional-grade full-range loudspeaker designed for high-street KTV venues and club houses. The 2-way speaker combines a 12″ (304.8mm) woofer with the 1.7″ (44mm) TR44026-2 annular polymer diaphragm neodymium compression driver, and stands itself out for its high power handling, low distortion and noticeable electro-acoustic conversion efficiency. Its 70°x60° coverage pattern provides smooth and even coverage whether installed in vertical or horizontal orientation. A high-slope passive networking is utilized for minimized band overlap.

DP-6212 Max outshines its league for its one-of-a-kind Starry Brown appearance. The rugged enclosure, which is constructed from 15mm plywood and finished in durable paint-coating, ensures the combination of visual and sound beauty last long. The front grille made from 16-gauge steel and backed with acoustic fabrics not only creates an air of elegance but also provide enough protection for drivers and components inside. The entire whole is fitted with dual NL4MP connectors for loop-thru of multiple speakers, thirteen (13) M10 threaded suspension points and six (6) M10 screws for bracket mounting, as well as a 35mm socket for pole mounting.

A showcase of DP-6212 Max speaker dedication to technology ad vancement, the rotatable DOMUS PRO LOUND logo will constantly illuminate during your hilarious karaoke singing. Thanks to the PSL (Passive Sound Lighting) Technology, the legendary DOMUS sound is now visible.

Specifications:

System:

System Type:	12″ , 2-way, bass-reflex
Frequency Range (-10 dB):	60 Hz - 20 kHz
Frequency Response (±3 dB):	80 Hz - 20 kHz
Sensitivity (1w@1m):	98 dB
Nominal Impedance:	8 Ohms
Maximum SPL:	125 dB (131 dB peak)
Power Rating: (Continuous/Program/Peak)	400 W/800 W/1600 W
Coverage Pattern:	70° X 60° (H X V)

Physical:

Dimensions (H X W X D):	603 mm X 350 mm X410 mm
	23.6 inch x 13.8 inch x 16.1 inch
Net Weight:	22 Kg
LF Driver:	1X 12" (304.8mm) woofer
	3 inch voice coil,ferrite magnet
HF Driver:	1 x 1.7" (44 mm) TR44026-2 Compression driver, 1.7″ voice coil,ferrite magnet
Input Connectors:	2 x Speakon NL4MP
Enclosure Construction:	Trapezoid, 15 mm, plywood

DP-6212 MAX(Royal blue)

DP-6212 MAX

DP-6212 MAX(Dreamy pink)

DP-6212 Max

12-Inch Full Range Loudspeaker System

Frequency Response:

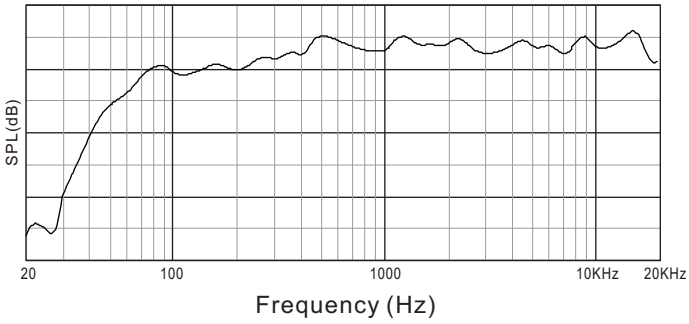

Beamwidth:

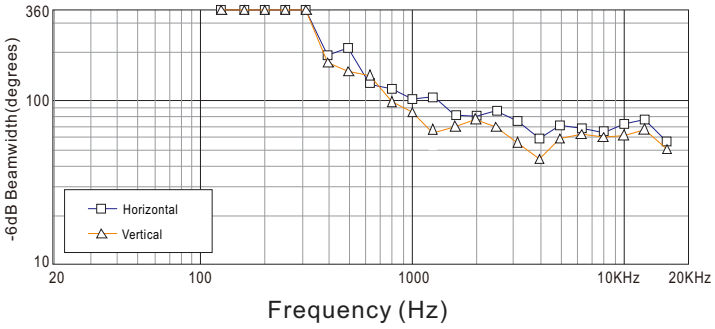

Dimensions:

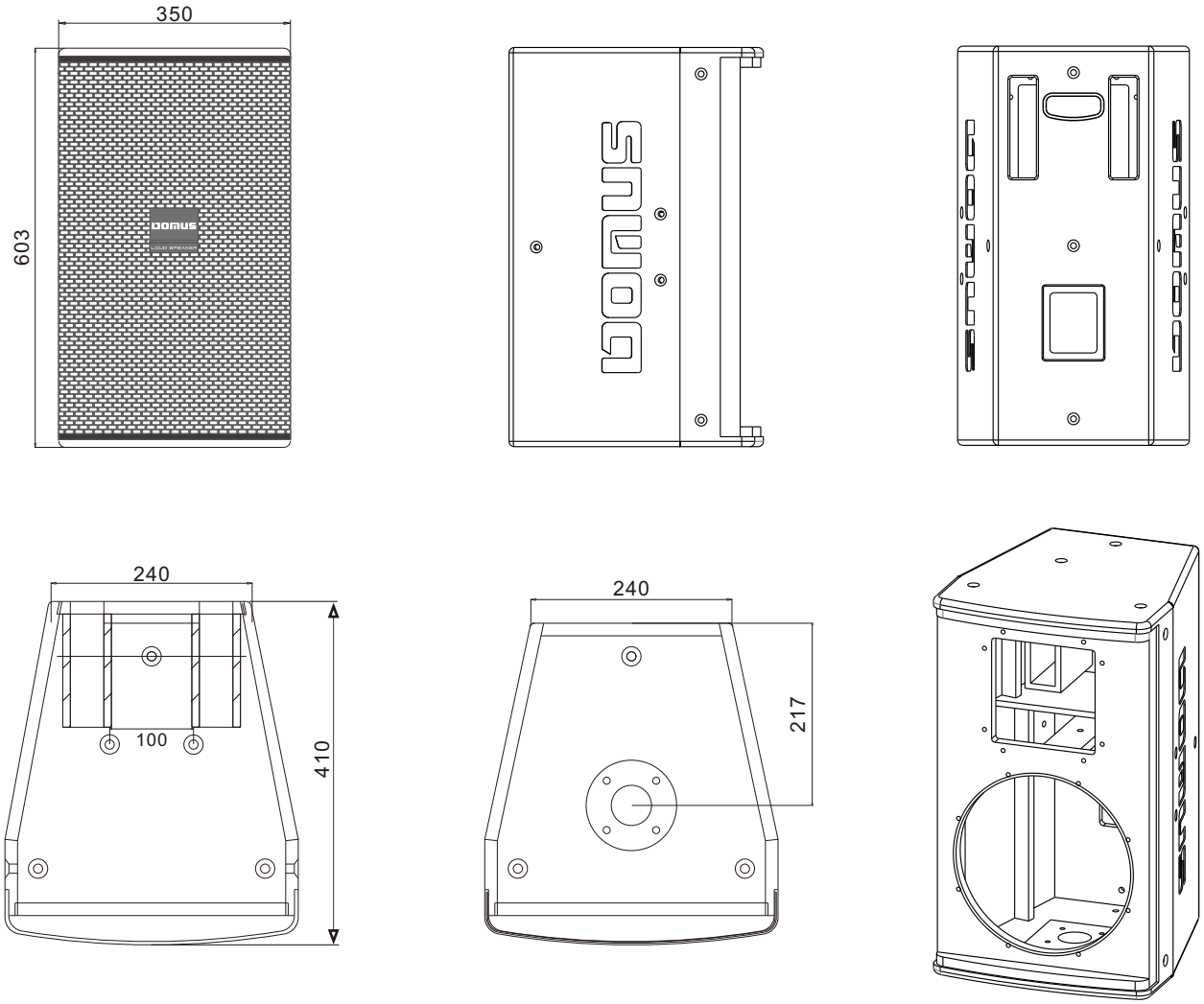

DOMUS JAPAN(H.K.)CO.,LTD
Add:The new territories of Hongkong New Road No. 188
Cambridge Plaza A block 6 Building Room 602
Tel:(852)26703806
Fax:(852)26684558
http:www.domus.com.cn